EVALUATION REPORT

FLORIDA BUILDING CODE, 9TH EDITION (2026)

Issued August 17, 2026

Manufacturer: VICWEST
5050 South Service Road, Unit 200
Burlington, ON L7L 5Y7
Canada
(905) 825-2252
www.vicwest.com

Manufacturing: Stratford, ON

Quality Assurance: Intertek Testing Services NA, Inc. – QA Entity (QUA1673)

SCOPE

Category: Roofing
Subcategory: Metal Roofing
Code Edition: Florida Building Code, 9th Edition (2026) Non-HVHZ
Code Sections: 1504.3
Properties: Wind Resistance

REFERENCES

Entity	Report No.	Standard	Year
PRI Construction Materials Technologies (TST5878)	2362T0004	UL 580	2006
		UL 1897	2015
PRI Construction Materials Technologies (TST5878)	2362T0005	UL 580	2006
		UL 1897	2015
		TAS 125	2003
PRI Construction Materials Technologies (TST5878)	2362T0006	UL 1897	2015
PRI Construction Materials Technologies (TST5878)	2362T0007.1	UL 580	2006
		UL 1897	2015
		TAS 125	2003
PRI Construction Materials Technologies (TST5878)	2362T0008	UL 1897	2015
PRI Construction Materials Technologies (TST5878)	2362T0009	UL 1897	2015
PRI Construction Materials Technologies (TST5878)	2362T0010	UL 1897	2015
PRI Construction Materials Technologies (TST5878)	2362T0012	UL 580	2006
		UL 1897	2015
		TAS 125	2003
Intertek (TST1509)	103884899COQ-004	ASTM E 108	2025
Intertek (TST1509)	103884899COQ-005A	ASTM E 108	2025
Intertek (TST1509)	105138821COQ-001R1	ASTM E 108	2025

This evaluation report is provided for State of Florida product approval under Rule 61G20-3. The manufacturer shall notify CREEK Technical Services, LLC of any product changes or quality assurance changes throughout the duration for which this report is valid. This evaluation report does not express nor imply warranty, installation, recommended use, or other product attributes that are not specifically addressed herein.

PRODUCT DESCRIPTION

Cedar Creek™ Shake

Profile: Shake roof facsimile; Concealed fasteners
Description: Non-structural, preformed, fastened steel panels
Material: Min. 28 ga. steel, ASTM A792 AZ50 Grade 33; Shall conform with FBC Section 1507.4.3

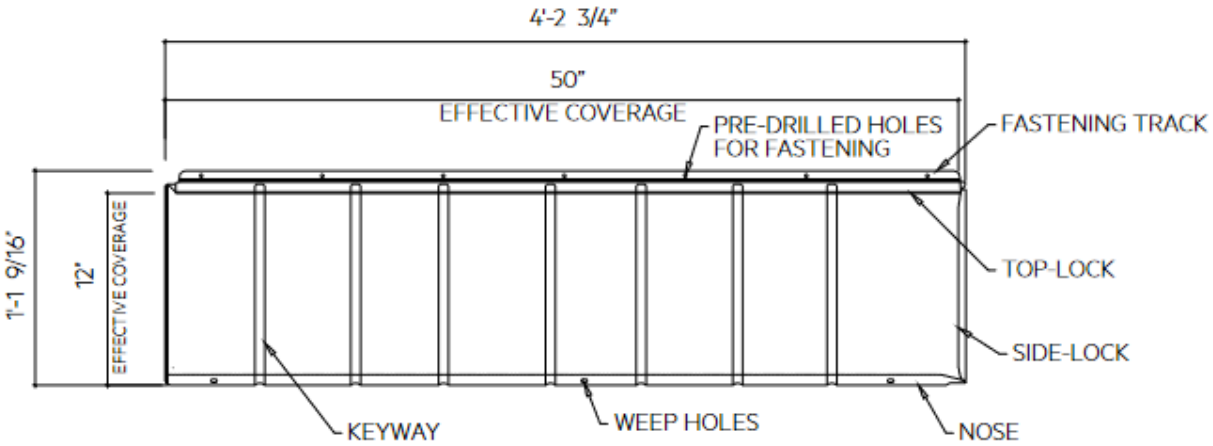

North Ridge™ Slate

Profile: Slate roof facsimile; Concealed fasteners
Description: Non-structural, preformed, fastened steel panels
Material: Min. 28 ga. steel, ASTM A792 AZ50 Grade 33; Shall conform with FBC Section 1507.4.3

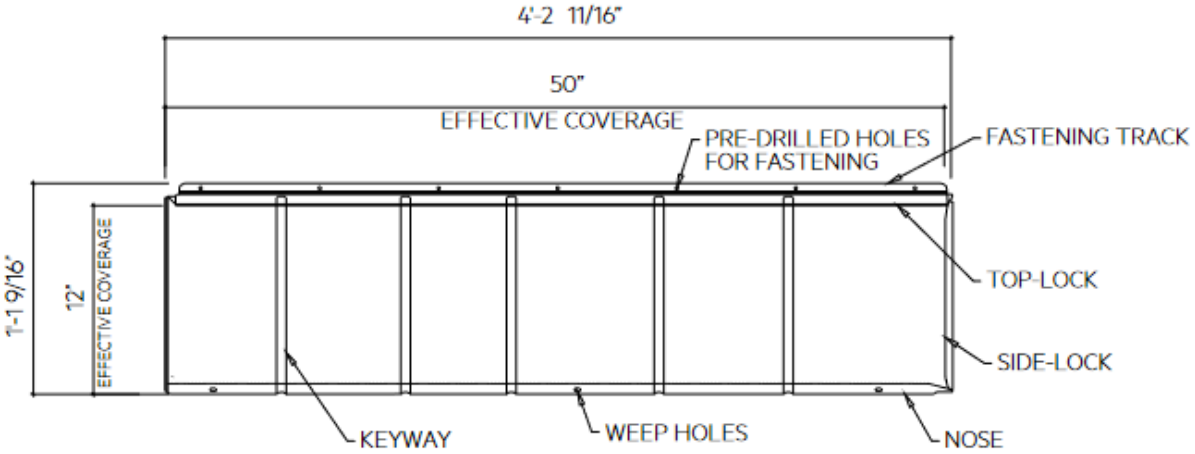

This evaluation report is provided for State of Florida product approval under Rule 61G20-3. The manufacturer shall notify CREEK Technical Services, LLC of any product changes or quality assurance changes throughout the duration for which this report is valid. This evaluation report does not express nor imply warranty, installation, recommended use, or other product attributes that are not specifically addressed herein.

Coastal Wave™

Profile: Tile roof facsimile
Description: Non-structural, preformed, fastened steel panels
Material: Min. 28 ga. steel, ASTM A792 AZ50 Grade 33; Shall conform with FBC Section 1507.4.3

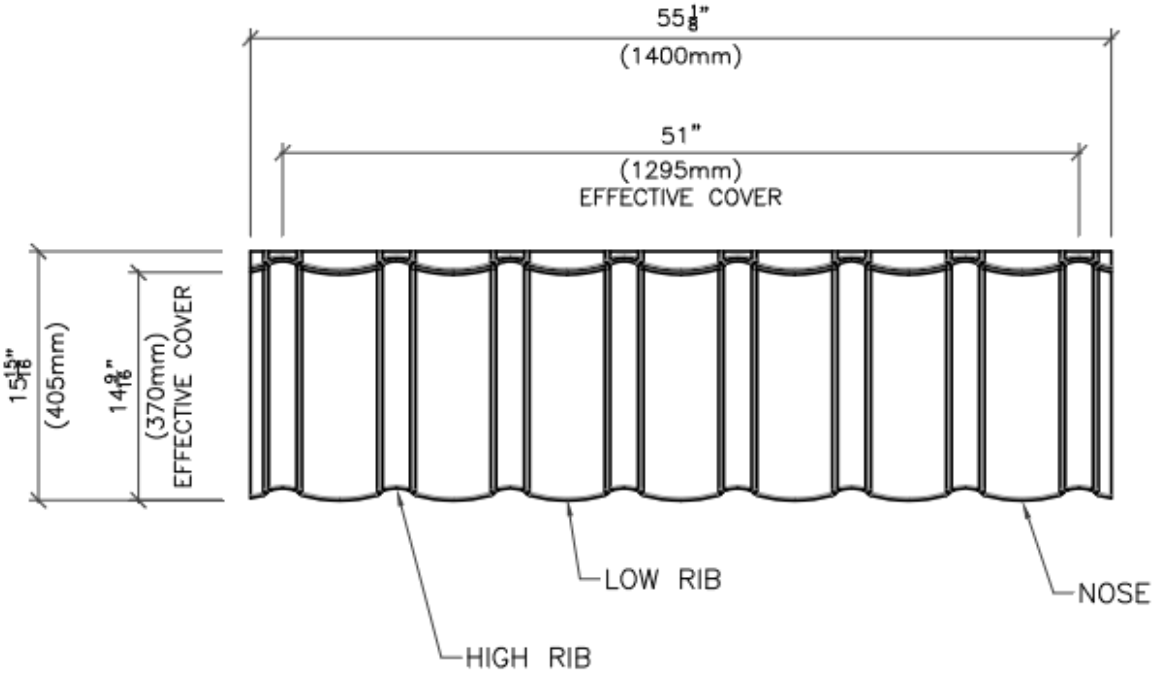

This evaluation report is provided for State of Florida product approval under Rule 61G20-3. The manufacturer shall notify CREEK Technical Services, LLC of any product changes or quality assurance changes throughout the duration for which this report is valid. This evaluation report does not express nor imply warranty, installation, recommended use, or other product attributes that are not specifically addressed herein.

APPROVED ASSEMBLIES

System 1 – Cedar Creek™ Shake or North Ridge™ Slate	
Slope:	3:12 or greater
Roof Deck:	Solid or closely fitted min. 7/16-inch OSB sheathing for new and existing construction at max. 24-inch span; Designed by others in accordance with FBC requirements.
Underlayment:	Installed in accordance with FBC requirements.
Panel:	Min. 28ga. steel Cedar Creek™ Shake or North Ridge™ Slate
Panel Attachment:	Metal Panel shall be installed as shown with seven (7) #10 x minimum 1 1/2-inch Master Gripper HWH screws along the fastening flange beginning 2-inches from the edge and approximately 7 3/4-inch o.c. thereafter. Panels are installed in courses by interlocking the headlap and sidelap to adjacent panels. Sidelaps are offset a min. 11-inches from the previous course. Fasteners shall penetrate through the deck a minimum 3/8-inch and shall comply with section 1506.6 and 1507.4.4.

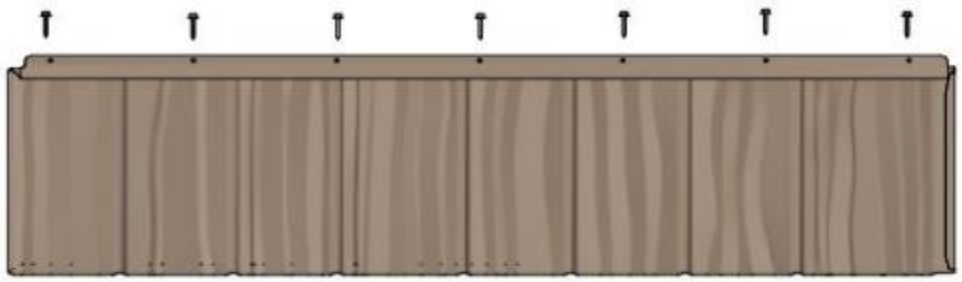

Maximum Design Pressures:	**-52.5 psf** *Pressure calculated using 2:1 margin of safety*

Maximum Mean Roof Heights
Slopes 2:12 – 12:12

Exposure	Basic Wind Speed (mph)								
	≤120	130	140	150	160	170	180	190	200
Zone 1 for Gable/Hip Roofs									
B	60 ft	60 ft	60 ft	57 ft	35 ft	22 ft	NA	NA	NA
C	60 ft	50 ft	24 ft	NA	NA	NA	NA	NA	NA
D	51 ft	20 ft	NA	NA	NA	NA	NA	NA	NA
Zone 2 for Gable Roofs and Zones 2 & 3 for Hip Roofs									
B	60 ft	59 ft	34 ft	20 ft	NA	NA	NA	NA	NA
C	28 ft	NA	NA	NA	NA	NA	NA	NA	NA
D	NA	NA	NA	NA	NA	NA	NA	NA	NA
Zone 3 for Gable Roofs									
B	39 ft	21 ft	NA	NA	NA	NA	NA	NA	NA
C	NA	NA	NA	NA	NA	NA	NA	NA	NA
D	NA	NA	NA	NA	NA	NA	NA	NA	NA

Notes: 1) Exposure category for the structure location shall be as defined in the Florida Building Code 2) Limitations are based on an effective wind area of $10ft^2$ or less 3) Topographic factors such as escarpments or hills are not included in the above assessment 4) Applicable for Enclosed Buildings without overhangs 5) NA = "Not Allowed" 6) K_d = 0.85 7) K_e = 1.0 8) Projects with mean roof heights of greater than 60 ft shall be evaluated by a licensed design professional 9) See page **Error! Bookmark not defined.** for details for dimensions and locales of Zone 1, 2, and 3 10) V_{ult} is shown in the tables above. Design wind loads are calculated using $V_{asd} = V_{ult}\sqrt{0.6}$ per 1609.3.1.

This evaluation report is provided for State of Florida product approval under Rule 61G20-3. The manufacturer shall notify CREEK Technical Services, LLC of any product changes or quality assurance changes throughout the duration for which this report is valid. This evaluation report does not express nor imply warranty, installation, recommended use, or other product attributes that are not specifically addressed herein.

System 2 – Cedar Creek™ Shake or North Ridge™ Slate	
Slope:	3:12 or greater
Roof Deck:	Solid or closely fitted min. 15/32-inch, 32/16 span rated, 4-ply, CDX plywood sheathing for new and existing construction at max. 24-inch span; Designed by others in accordance with FBC requirements.
Underlayment:	Installed in accordance with FBC requirements.
Panel:	Min. 28ga. steel Cedar Creek™ Shake or North Ridge™ Slate
Panel Attachment:	Metal Panel shall be installed as shown with seven (7) #10 x minimum 1 1/2-inch Master Gripper HWH screws along the fastening flange beginning 2-inches from the edge and approximately 7 3/4-inch o.c. thereafter. Panels are installed in courses by interlocking the headlap and sidelap to adjacent panels. Sidelaps are offset a min. 11-inches from the previous course. Fasteners shall penetrate through the deck a minimum 3/8-inch and shall comply with section 1506.6 and 1507.4.4.

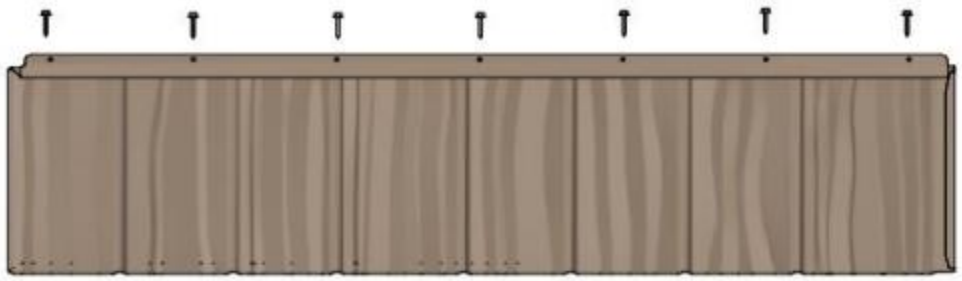

Maximum Design Pressures:	**-72.5 psf** *Pressure calculated using 2:1 margin of safety*

Maximum Mean Roof Heights
Slopes 2:12 – 12:12

Exposure	Basic Wind Speed (mph)								
	≤120	130	140	150	160	170	180	190	200
Zone 1 for Gable/Hip Roofs									
B	60 ft	60 ft	60 ft	60 ft	60 ft	60 ft	49 ft	32 ft	22 ft
C	60 ft	60 ft	60 ft	60 ft	32 ft	17 ft	NA	NA	NA
D	60 ft	60 ft	55 ft	25 ft	NA	NA	NA	NA	NA
Zone 2 for Gable Roofs and Zones 2 & 3 for Hip Roofs									
B	60 ft	60 ft	60 ft	60 ft	41 ft	26 ft	17 ft	NA	NA
C	60 ft	60 ft	30 ft	15 ft	NA	NA	NA	NA	NA
D	60 ft	26 ft	NA	NA	NA	NA	NA	NA	NA
Zone 3 for Gable Roofs									
B	60 ft	60 ft	41 ft	24 ft	15 ft	NA	NA	NA	NA
C	36 ft	16 ft	NA	NA	NA	NA	NA	NA	NA
D	NA	NA	NA	NA	NA	NA	NA	NA	NA

Notes: 1) Exposure category for the structure location shall be as defined in the Florida Building Code 2) Limitations are based on an effective wind area of $10ft^2$ or less 3) Topographic factors such as escarpments or hills are not included in the above assessment 4) Applicable for Enclosed Buildings without overhangs 5) NA = "Not Allowed" 6) K_d = 0.85 7) K_e = 1.0 8) Projects with mean roof heights of greater than 60 ft shall be evaluated by a licensed design professional 9) See page **Error! Bookmark not defined.** for details for dimensions and locales of Zone 1, 2, and 3 10) V_{ult} is shown in the tables above. Design wind loads are calculated using $V_{asd} = V_{ult}\sqrt{0.6}$ per 1609.3.1.

This evaluation report is provided for State of Florida product approval under Rule 61G20-3. The manufacturer shall notify CREEK Technical Services, LLC of any product changes or quality assurance changes throughout the duration for which this report is valid. This evaluation report does not express nor imply warranty, installation, recommended use, or other product attributes that are not specifically addressed herein.

System 3 – Cedar Creek™ Shake or North Ridge™ Slate	
Slope:	3:12 or greater
Roof Deck:	Solid or closely fitted min. 15/32-inch, 32/16 span rated, 4-ply, CDX plywood sheathing for new and existing construction at max. 24-inch span; Designed by others in accordance with FBC requirements.
Underlayment:	Installed in accordance with FBC requirements.
Panel:	Min. 26ga. steel Cedar Creek™ Shake or North Ridge™ Slate
Panel Attachment:	Metal Panel shall be installed as shown with seven (7) #10 x minimum 1 1/2-inch QuikGrip Metal2Wood HWH screws along the fastening flange beginning 2-inches from the edge and approximately 7 3/4-inch o.c. thereafter. Panels are installed in courses by interlocking the headlap and sidelap to adjacent panels. Sidelaps are offset a min. 11-inches from the previous course. Fasteners shall penetrate through the deck a minimum 3/8-inch and shall comply with section 1506.6 and 1507.4.4.

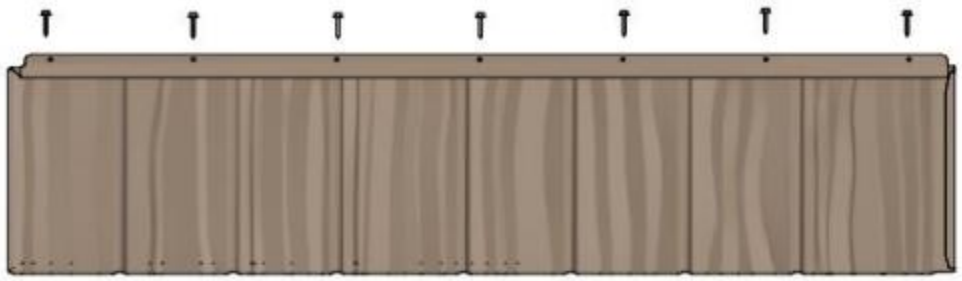

Maximum Design Pressures:	**-90 psf** *Pressure calculated using 2:1 margin of safety*

Maximum Mean Roof Heights
Slopes 2:12 – 12:12

Exposure	Basic Wind Speed (mph)								
	≤120	130	140	150	160	170	180	190	200
Zone 1 for Gable/Hip Roofs									
B	60 ft	60 ft	60 ft	60 ft	60 ft	60 ft	60 ft	60 ft	50 ft
C	60 ft	60 ft	60 ft	60 ft	60 ft	51 ft	29 ft	17 ft	NA
D	60 ft	60 ft	60 ft	60 ft	41 ft	20 ft	NA	NA	NA
Zone 2 for Gable Roofs and Zones 2 & 3 for Hip Roofs									
B	60 ft	60 ft	60 ft	60 ft	60 ft	59 ft	38 ft	25 ft	17 ft
C	60 ft	60 ft	60 ft	44 ft	23 ft	NA	NA	NA	NA
D	60 ft	60 ft	38 ft	17 ft	NA	NA	NA	NA	NA
Zone 3 for Gable Roofs									
B	60 ft	60 ft	60 ft	55 ft	34 ft	21 ft	NA	NA	NA
C	60 ft	48 ft	23 ft	NA	NA	NA	NA	NA	NA
D	47 ft	19 ft	NA	NA	NA	NA	NA	NA	NA

Notes: 1) Exposure category for the structure location shall be as defined in the Florida Building Code 2) Limitations are based on an effective wind area of $10ft^2$ or less 3) Topographic factors such as escarpments or hills are not included in the above assessment 4) Applicable for Enclosed Buildings without overhangs 5) NA = "Not Allowed" 6) K_d = 0.85 7) K_e = 1.0 8) Projects with mean roof heights of greater than 60 ft shall be evaluated by a licensed design professional 9) See page **Error! Bookmark not defined.** for details for dimensions and locales of Zone 1, 2, and 3 10) V_{ult} is shown in the tables above. Design wind loads are calculated using $V_{asd} = V_{ult}\sqrt{0.6}$ per 1609.3.1.

This evaluation report is provided for State of Florida product approval under Rule 61G20-3. The manufacturer shall notify CREEK Technical Services, LLC of any product changes or quality assurance changes throughout the duration for which this report is valid. This evaluation report does not express nor imply warranty, installation, recommended use, or other product attributes that are not specifically addressed herein.

System 4 – Cedar Creek™ Shake or North Ridge™ Slate	
Slope:	3:12 or greater
Roof Deck:	Solid or closely fitted min. 15/32-inch, 32/16 span rated, 4-ply, CDX plywood sheathing for new and existing construction at max. 24-inch span; Designed by others in accordance with FBC requirements.
Underlayment:	Installed in accordance with FBC requirements.
Panel:	Min. 26ga. steel Cedar Creek™ Shake or North Ridge™ Slate
Panel Attachment:	Metal Panel shall be installed as shown with thirteen (13) #10 x minimum 1 1/2-inch QuikGrip Metal2Wood HWH screws along the fastening flange beginning 2-inches from the edge and approximately 3 7/8-inch o.c. thereafter. Panels are installed in courses by interlocking the headlap and sidelap to adjacent panels. Sidelaps are offset a min. 11-inches from the previous course. Fasteners shall penetrate through the deck a minimum 3/8-inch and shall comply with section 1506.6 and 1507.4.4.

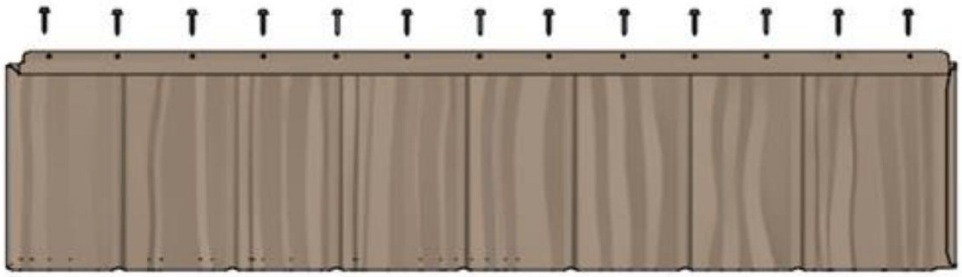

Maximum Design Pressures:	**-112.5 psf** *Pressure calculated using 2:1 margin of safety*

Maximum Mean Roof Heights
Slopes 2:12 – 12:12

Exposure	Basic Wind Speed (mph)								
	≤120	130	140	150	160	170	180	190	200
Zone 1 for Gable/Hip Roofs									
B	60 ft	60 ft	60 ft	60 ft	60 ft	60 ft	60 ft	60 ft	60 ft
C	60 ft	60 ft	60 ft	60 ft	60 ft	60 ft	60 ft	51 ft	31 ft
D	60 ft	60 ft	60 ft	60 ft	60 ft	60 ft	38 ft	20 ft	NA
Zone 2 for Gable Roofs and Zones 2 & 3 for Hip Roofs									
B	60 ft	60 ft	60 ft	60 ft	60 ft	60 ft	60 ft	59 ft	40 ft
C	60 ft	60 ft	60 ft	60 ft	60 ft	39 ft	22 ft	NA	NA
D	60 ft	60 ft	60 ft	60 ft	30 ft	15 ft	NA	NA	NA
Zone 3 for Gable Roofs									
B	60 ft	60 ft	60 ft	60 ft	60 ft	49 ft	32 ft	21 ft	15 ft
C	60 ft	60 ft	60 ft	35 ft	18 ft	NA	NA	NA	NA
D	60 ft	60 ft	29 ft	NA	NA	NA	NA	NA	NA

Notes: 1) Exposure category for the structure location shall be as defined in the Florida Building Code 2) Limitations are based on an effective wind area of $10ft^2$ or less 3) Topographic factors such as escarpments or hills are not included in the above assessment 4) Applicable for Enclosed Buildings without overhangs 5) NA = "Not Allowed" 6) K_d = 0.85 7) K_e = 1.0 8) Projects with mean roof heights of greater than 60 ft shall be evaluated by a licensed design professional 9) See page **Error! Bookmark not defined.** for details for dimensions and locales of Zone 1, 2, and 3 10) V_{ult} is shown in the tables above. Design wind loads are calculated using $V_{asd} = V_{ult}\sqrt{0.6}$ per 1609.3.1.

This evaluation report is provided for State of Florida product approval under Rule 61G20-3. The manufacturer shall notify CREEK Technical Services, LLC of any product changes or quality assurance changes throughout the duration for which this report is valid. This evaluation report does not express nor imply warranty, installation, recommended use, or other product attributes that are not specifically addressed herein.

System 5 – Coastal Wave™	
Slope:	3:12 or greater
Roof Deck:	Solid or closely fitted min. 15/32-inch, 32/16 span rated, 4-ply, CDX plywood sheathing for new and existing construction at max. 24-inch span; Designed by others in accordance with FBC requirements.
Underlayment:	Installed in accordance with FBC requirements.
Panel:	Min. 28ga. steel Coastal Wave™
Panel Attachment:	Metal Panel shall be installed as shown with seven (7) #10 x minimum 2 1/2-inch Master Gripper pancake head screws, Type A point, at each low rib along the back shelf of the panel, approximately 7 1/4-inch o.c.. Panels shall then be stitched through the nose at the high rib with seven (7) #8 x 3/4-inch Master Drillers HWH screws with EPDM sealing washer beginning at the side lap and spaced approximately 7 1/4-inch o.c.. Sidelaps are offset a min. 14 1/2-inches from the previous course. Fasteners shall penetrate through the deck a minimum 3/8-inch and shall comply with section 1506.6 and 1507.4.4.

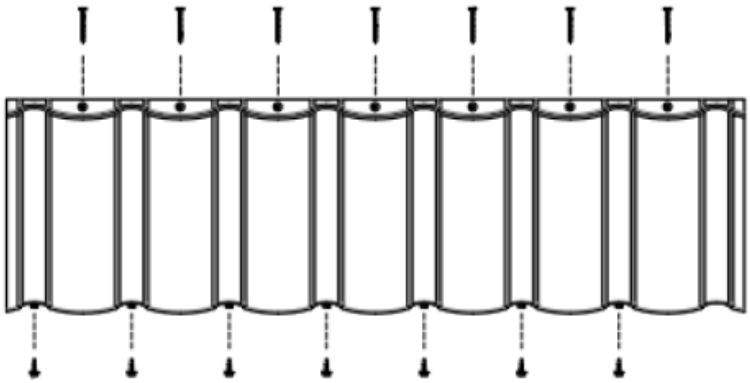

Maximum Design Pressures:	**-112.5 psf** *Pressure calculated using 2:1 margin of safety*

Maximum Mean Roof Heights
Slopes 2:12 – 12:12

Exposure	Basic Wind Speed (mph)								
	≤120	130	140	150	160	170	180	190	200
Zone 1 for Gable/Hip Roofs									
B	60 ft	60 ft	60 ft	60 ft	60 ft	60 ft	60 ft	60 ft	60 ft
C	60 ft	60 ft	60 ft	60 ft	60 ft	60 ft	60 ft	51 ft	31 ft
D	60 ft	60 ft	60 ft	60 ft	60 ft	60 ft	38 ft	20 ft	NA
Zone 2 for Gable Roofs and Zones 2 & 3 for Hip Roofs									
B	60 ft	60 ft	60 ft	60 ft	60 ft	60 ft	60 ft	59 ft	40 ft
C	60 ft	60 ft	60 ft	60 ft	60 ft	39 ft	22 ft	NA	NA
D	60 ft	60 ft	60 ft	60 ft	30 ft	15 ft	NA	NA	NA
Zone 3 for Gable Roofs									
B	60 ft	60 ft	60 ft	60 ft	60 ft	49 ft	32 ft	21 ft	15 ft
C	60 ft	60 ft	60 ft	35 ft	18 ft	NA	NA	NA	NA
D	60 ft	60 ft	29 ft	NA	NA	NA	NA	NA	NA

Notes: 1) Exposure category for the structure location shall be as defined in the Florida Building Code 2) Limitations are based on an effective wind area of 10ft^2 or less 3) Topographic factors such as escarpments or hills are not included in the above assessment 4) Applicable for Enclosed Buildings without overhangs 5) NA = "Not Allowed" 6) K_d = 0.85 7) K_e = 1.0 8) Projects with mean roof heights of greater than 60 ft shall be evaluated by a licensed design professional 9) See page **Error! Bookmark not defined.** for details for dimensions and locales of Zone 1, 2, and 3 10) V_{ult} is shown in the tables above. Design wind loads are calculated using $V_{asd} = V_{ult}\sqrt{0.6}$ per 1609.3.1.

This evaluation report is provided for State of Florida product approval under Rule 61G20-3. The manufacturer shall notify CREEK Technical Services, LLC of any product changes or quality assurance changes throughout the duration for which this report is valid. This evaluation report does not express nor imply warranty, installation, recommended use, or other product attributes that are not specifically addressed herein.

System 6 – Coastal Wave™	
Slope:	3:12 or greater
Roof Deck:	Solid or closely fitted min. 15/32-inch, 32/16 span rated, 4-ply, CDX plywood sheathing for new and existing construction at max. 24-inch span; Designed by others in accordance with FBC requirements.
Underlayment:	Installed in accordance with FBC requirements.
Panel:	Min. 28ga. steel Coastal Wave™
Panel Attachment:	Metal Panel shall be installed as shown with four (4) #10 x minimum 2 1/2-inch Master Gripper pancake head screws, Type A point, at each low rib along the back shelf of the panel, approximately 14 1/2-inch o.c.. Panels shall then be stitched through the nose at the high rib with seven (7) #8 x 3/4-inch Master Drillers HWH screws with EPDM sealing washer beginning at the side lap and spaced approximately 7 1/4-inch o.c.. Sidelaps are offset a min. 14 1/2-inches from the previous course. Fasteners shall penetrate through the deck a minimum 3/8-inch and shall comply with section 1506.6 and 1507.4.4.

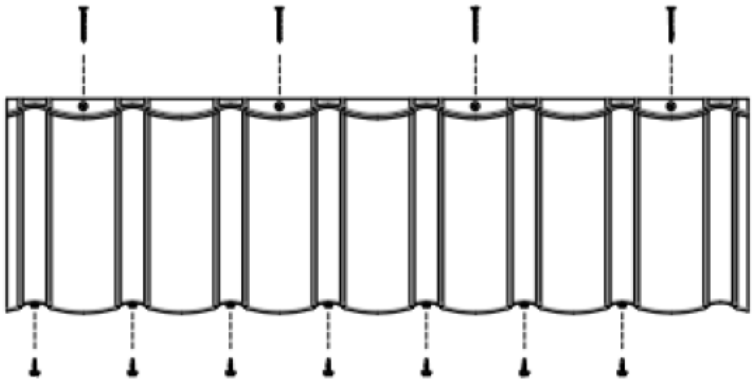

Maximum Design Pressures:	**-67.5 psf** *Pressure calculated using 2:1 margin of safety*

Maximum Mean Roof Heights
Slopes 2:12 – 12:12

Exposure	Basic Wind Speed (mph)								
	≤120	130	140	150	160	170	180	190	200
Zone 1 for Gable/Hip Roofs									
B	60 ft	60 ft	60 ft	60 ft	60 ft	57 ft	37 ft	25 ft	17 ft
C	60 ft	60 ft	60 ft	42 ft	22 ft	NA	NA	NA	NA
D	60 ft	60 ft	36 ft	16 ft	NA	NA	NA	NA	NA
Zone 2 for Gable Roofs and Zones 2 & 3 for Hip Roofs									
B	60 ft	60 ft	60 ft	52 ft	32 ft	20 ft	NA	NA	NA
C	60 ft	44 ft	21 ft	NA	NA	NA	NA	NA	NA
D	43 ft	17 ft	NA	NA	NA	NA	NA	NA	NA
Zone 3 for Gable Roofs									
B	60 ft	54 ft	31 ft	18 ft	NA	NA	NA	NA	NA
C	25 ft	NA	NA	NA	NA	NA	NA	NA	NA
D	NA	NA	NA	NA	NA	NA	NA	NA	NA

Notes: 1) Exposure category for the structure location shall be as defined in the Florida Building Code 2) Limitations are based on an effective wind area of $10ft^2$ or less 3) Topographic factors such as escarpments or hills are not included in the above assessment 4) Applicable for Enclosed Buildings without overhangs 5) NA = "Not Allowed" 6) K_d = 0.85 7) K_e = 1.0 8) Projects with mean roof heights of greater than 60 ft shall be evaluated by a licensed design professional 9) See page **Error! Bookmark not defined.** for details for dimensions and locales of Zone 1, 2, and 3 10) V_{ult} is shown in the tables above. Design wind loads are calculated using $V_{asd} = V_{ult}\sqrt{0.6}$ per 1609.3.1.

This evaluation report is provided for State of Florida product approval under Rule 61G20-3. The manufacturer shall notify CREEK Technical Services, LLC of any product changes or quality assurance changes throughout the duration for which this report is valid. This evaluation report does not express nor imply warranty, installation, recommended use, or other product attributes that are not specifically addressed herein.

System 7 – Coastal Wave™	
Slope:	3:12 or greater
Roof Deck:	Solid or closely fitted min. 7/16-inch OSB sheathing for new and existing construction at max. 24-inch span; Designed by others in accordance with FBC requirements.
Underlayment:	Installed in accordance with FBC requirements.
Panel:	Min. 28ga. steel Coastal Wave™
Panel Attachment:	Metal Panel shall be installed as shown with seven (7) #10 x minimum 2 1/2-inch Master Gripper pancake head screws, Type A point, at each low rib along the back shelf of the panel, approximately 7 1/4-inch o.c.. Panels shall then be stitched through the nose at the high rib with seven (7) #8 x 3/4-inch Master Drillers HWH screws with EPDM sealing washer beginning at the side lap and spaced approximately 7 1/4-inch o.c.. Sidelaps are offset a min. 14 1/2-inches from the previous course. Fasteners shall penetrate through the deck a minimum 3/8-inch and shall comply with section 1506.6 and 1507.4.4.

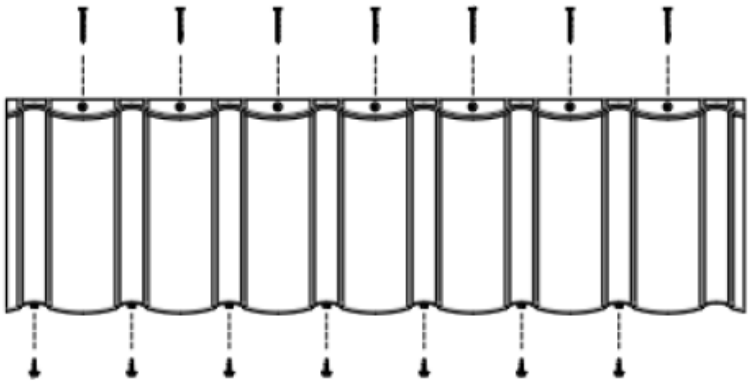

Maximum Design Pressures:	**-82.5 psf** *Pressure calculated using 2:1 margin of safety*

Maximum Mean Roof Heights
Slopes 2:12 – 12:12

Exposure	Basic Wind Speed (mph)								
	≤120	130	140	150	160	170	180	190	200
Zone 1 for Gable/Hip Roofs									
B	60 ft	60 ft	60 ft	60 ft	60 ft	60 ft	60 ft	53 ft	36 ft
C	60 ft	60 ft	60 ft	60 ft	60 ft	33 ft	19 ft	NA	NA
D	60 ft	60 ft	60 ft	52 ft	25 ft	NA	NA	NA	NA
Zone 2 for Gable Roofs and Zones 2 & 3 for Hip Roofs									
B	60 ft	60 ft	60 ft	60 ft	60 ft	43 ft	28 ft	18 ft	NA
C	60 ft	60 ft	57 ft	29 ft	15 ft	NA	NA	NA	NA
D	60 ft	55 ft	23 ft	NA	NA	NA	NA	NA	NA
Zone 3 for Gable Roofs									
B	60 ft	60 ft	60 ft	39 ft	24 ft	15 ft	NA	NA	NA
C	60 ft	31 ft	15 ft	NA	NA	NA	NA	NA	NA
D	29 ft	NA	NA	NA	NA	NA	NA	NA	NA

Notes: 1) Exposure category for the structure location shall be as defined in the Florida Building Code 2) Limitations are based on an effective wind area of $10ft^2$ or less 3) Topographic factors such as escarpments or hills are not included in the above assessment 4) Applicable for Enclosed Buildings without overhangs 5) NA = "Not Allowed" 6) K_d = 0.85 7) K_e = 1.0 8) Projects with mean roof heights of greater than 60 ft shall be evaluated by a licensed design professional 9) See page **Error! Bookmark not defined.** for details for dimensions and locales of Zone 1, 2, and 3 10) V_{ult} is shown in the tables above. Design wind loads are calculated using $V_{asd} = V_{ult}\sqrt{0.6}$ per 1609.3.1.

This evaluation report is provided for State of Florida product approval under Rule 61G20-3. The manufacturer shall notify CREEK Technical Services, LLC of any product changes or quality assurance changes throughout the duration for which this report is valid. This evaluation report does not express nor imply warranty, installation, recommended use, or other product attributes that are not specifically addressed herein.

Gable Roofs		Hip Roofs
Slopes 2:12 to 6.1:12	Slopes >6.1:12 to 12:12	Slopes 2:12 to 12:12
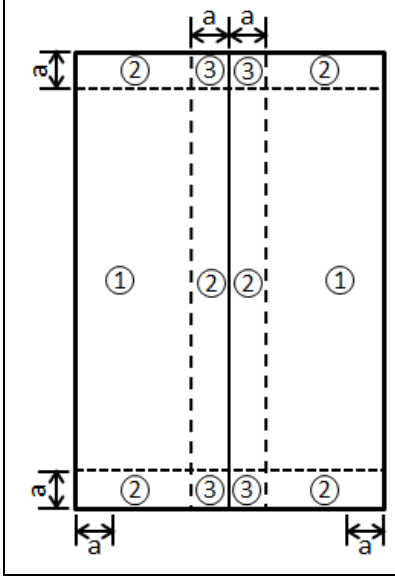	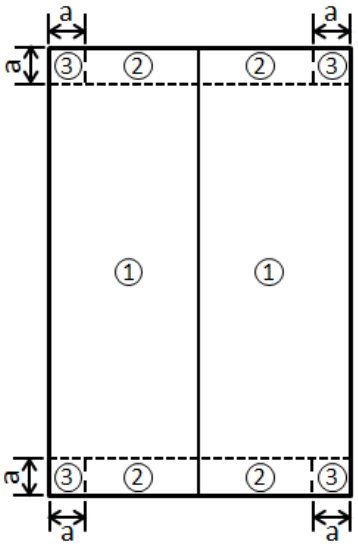	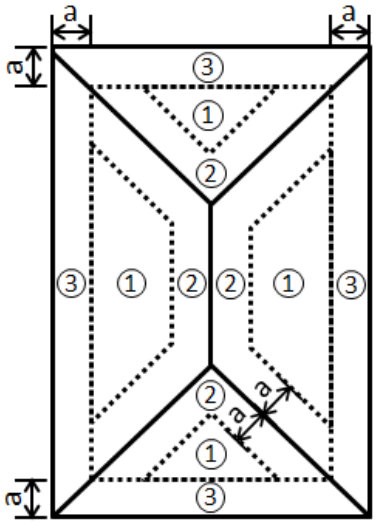

Dimension “a” shall be 10% of the least horizontal dimension or (0.4 x *Mean Roof Height)*, whichever is smaller, but not less than either 4% of the least horizontal dimension or 3ft.

LIMITATIONS

1. This report is not for use in the HVHZ.
2. Fire classification is not within the scope of this evaluation.
3. The roof deck and the roof deck attachment shall be designed by others to meet the minimum design loads established for components and cladding and in accordance with FBC requirements.
4. Roof slope shall be in accordance with FBC Section 1507.4.2.
5. Reroofing shall be in accordance with FBC Section 1511. Recovery versus replacement shall be evaluated in accordance with FBC Section 1511.3.
6. Installation of the evaluated products shall comply with this report, the FBC and the manufacturer’s published application instructions. Where discrepancies exist between these sources, the more restrictive and FBC compliant installation detail shall prevail.
7. FBC Section 1504.3.1.1 is not within the scope of this evaluation. Compliance with FBC Section 1504.3.1.1 shall be established through other *approved* products.
8. Materials shall conform to FBC Sections 1506 and 1711.
9. All products listed in this report shall be manufactured under a quality assurance program in compliance with Rule 61G20-3.

This evaluation report is provided for State of Florida product approval under Rule 61G20-3. The manufacturer shall notify CREEK Technical Services, LLC of any product changes or quality assurance changes throughout the duration for which this report is valid. This evaluation report does not express nor imply warranty, installation, recommended use, or other product attributes that are not specifically addressed herein.

COMPLIANCE STATEMENT

This report has been prepared in accordance with F.A.C. Rule 61G20-3.

This item has been digitally signed and sealed by Zachary R. Priest, PE, on 8/17/2026.

Printed copies of this document are not considered signed and sealed and the signature must be verified on any electronic copies.

Digitally signed by Zachary R. Priest
2026.08.17 15:16:44 -04'00'

Zachary R. Priest, P.E.
Florida Registration No. 74021
Organization No. ANE9641

CERTIFICATION OF INDEPENDENCE

CREEK Technical Services, LLC does not have, nor will it acquire, a financial interest in any company manufacturing or distributing products under this evaluation.

CREEK Technical Services, LLC is not owned, operated, or controlled by any company manufacturing or distributing products under this evaluation.

Zachary R. Priest, P.E. does not have, nor will acquire, a financial interest in any company manufacturing or distributing products under this evaluation.

Zachary R. Priest, P.E. does not have, nor will acquire, a financial interest in any other entity involved in the approval process of the product.

END OF REPORT

This evaluation report is provided for State of Florida product approval under Rule 61G20-3. The manufacturer shall notify CREEK Technical Services, LLC of any product changes or quality assurance changes throughout the duration for which this report is valid. This evaluation report does not express nor imply warranty, installation, recommended use, or other product attributes that are not specifically addressed herein.